Keshavi Engineering Concepts & Solutions



ROOFING SOLUTIONS



FRP & WPC DOORS



FRP DRAINAGE SOLUTIONS

BUILD TO LAST : ENGINEERED FOR STRENGTH



+919412653930
+919639334800

kecprojects009@gmail.com

Keshavi Engineering Concepts & Solutions

OUR PRODUCTS:

FRP ROOFING SHEETS



FRP DAYLIGHT SHEETS



FRP GELCOAT SHEETS



CHEMICAL RESISTANCE FRP SHEETS



PPGI ROOFING SHEETS



PPGL ROOFING SHEETS



GRP CLADDING SHAFT



FRP PLUMBING SHAFT GRILL



WPC JAALI



+919412653930
+919639334800

kecprojects009@gmail.com

Keshavi Engineering Concepts & Solutions

OUR PRODUCTS:

FRP MANHOLE COVERS



FRP WATER GULLY COVERS



FRP MOULDED GRATINGS



FRP PANEL DOORS



FRP FLUSH DOOR SHUTTER



WPC DOORS & FRAMES



TURBO VENTILATOR



FRP RAINWATER GUTTER



FRP BUFFLE MOLDS



+919412653930
+919639334800

kecprojects009@gmail.com

Keshavi Engineering Concepts & Solutions

OUR OTHER PRODUCTS:

FRP ANTI-SKID SAFETY FLAT



FRP EXPANSION JOINTS

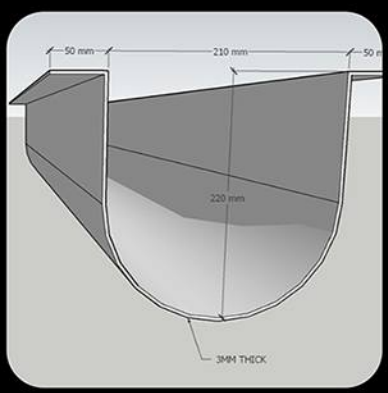

FRP POTS



BUILD TO LAST : ENGINEERED FOR STRENGTH

CONTACT US:

Keshavi Engineering Concepts & Solutions
GSTIN: 09DNGPG9835R1ZZ

Reg. Address : Seeta Enclave, Latha Factory Road, Malik Chowk, Jalalpur, Aligarh, Uttar Pradesh - 202001

Contact No.: +919412653930
+919639334800
Email : kecprojects009@gmail.com